Sigmaphi magnetic measurements on FAIR HESR dipole and quadrupole magnets

Marie-Julie Leray Pereira,
Samuel Tailhardat, Anthony Le Baquer (SIGMAPHI)

Content

- SIGMAPHI presentation
- Introduction to FAIR project
- Harmonic bench configuration, rotating coil and Flux coil manufacturing
- Measurement qualification
- Measurement results
- Conclusion

Sigmaphi is focused on Accelerator Technologies and Superconducting Magnets

2014 : sales budget 22 M€
143 highly qualified people (of which 80 engineers and managers)

- Magnets facility in Vannes (France)
- Electronics facility in Haguenau (France)
- 100% Sigmaphi owned magnets facility in Beijing
- Sales branch in Tokyo (Japan)

Particle beamlines and components

From optics to installation and alignment

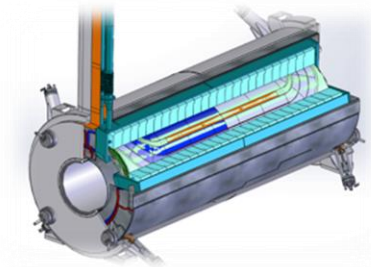

Magnets : from small to very large (resistive, SC, PM, AC)

High stability power supplies

Vacuum

HV Decks

Diagnostics

Installation

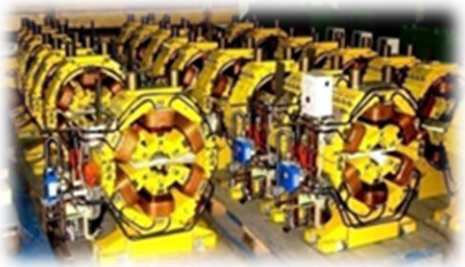

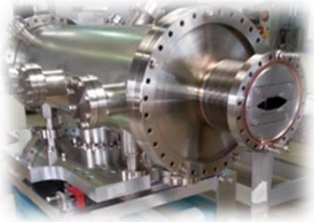

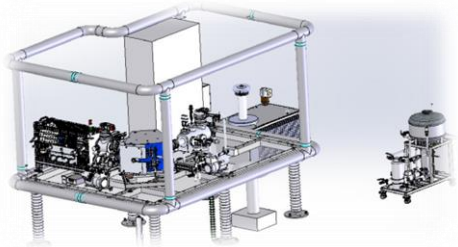

The High-Energy Storage Ring (HESR) is dedicated to Strong Interaction studies with antiprotons in the momentum range from 1.5 to 15 GeV/c.

FZJ: German contribution to the international facility FAIR at Darmstadt (HESR)

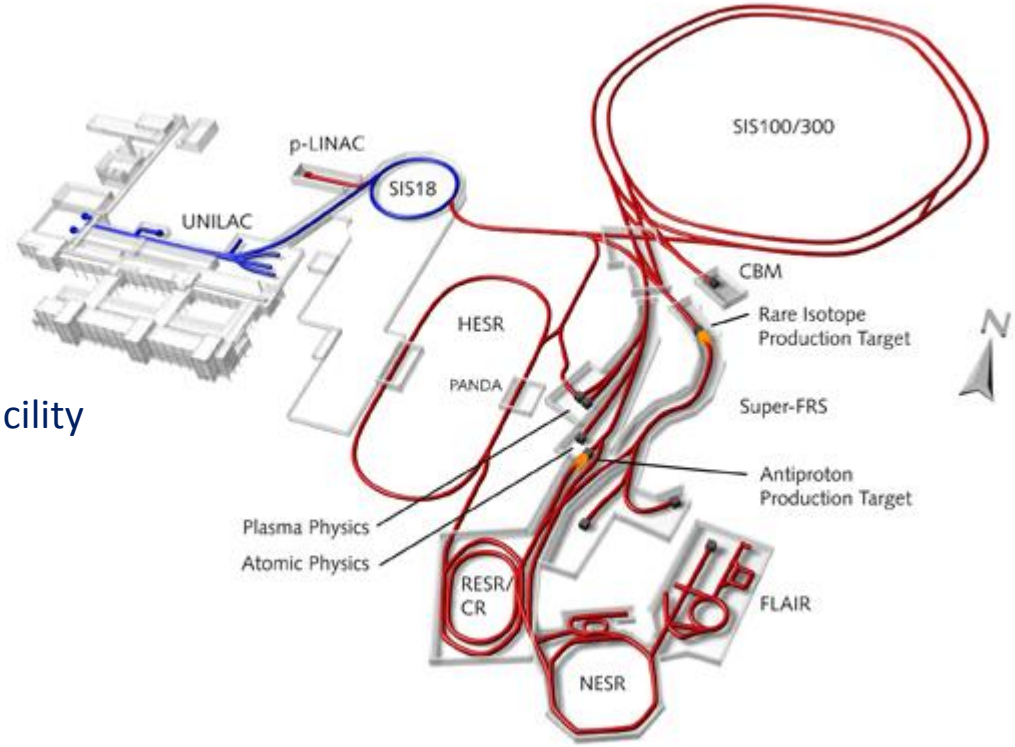

FAIR HESR / FZJ and Sigmaphi

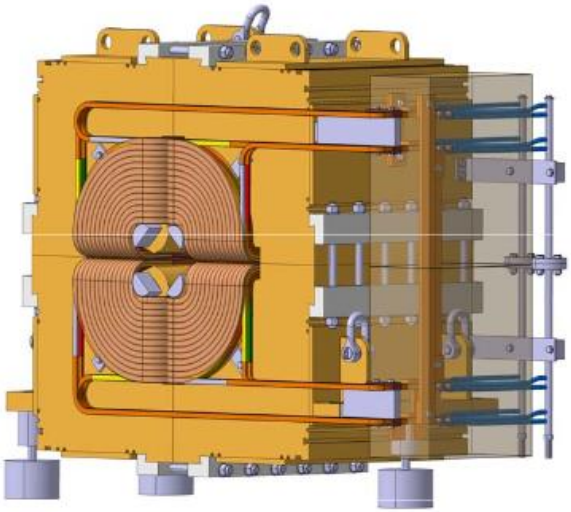

84 quadrupole magnets

60 cm long, 5.2 t

44 dipole magnets

4.2 m long, 35 t

0.17T < B < 1.7 T

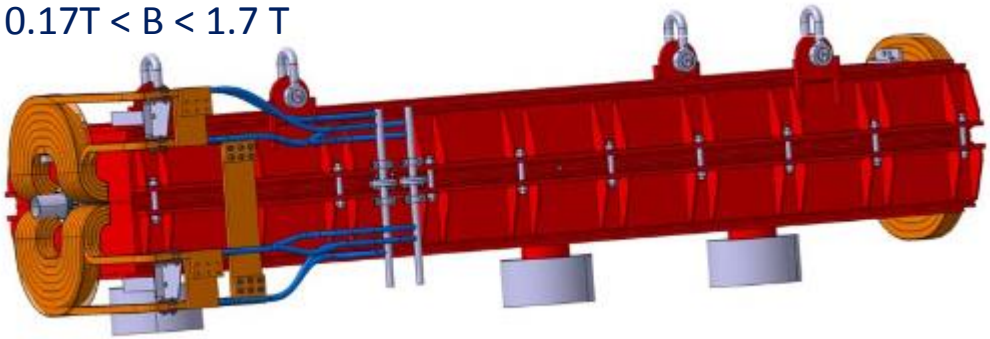

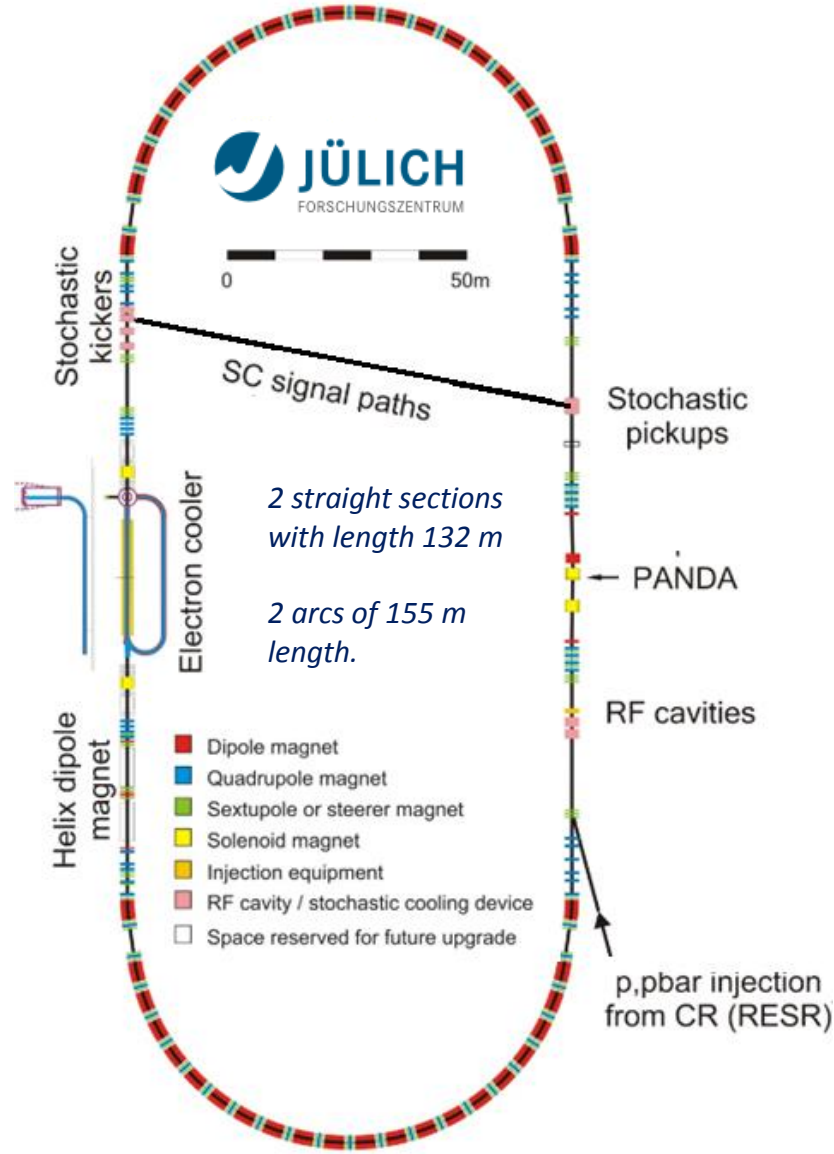

Measurement main issues

Same concept as our « Medaustron bench »
But for 6 tons

FAIR QUADRUPOLE measurements

- Designing and manufacturing of a new harmonic bench
- 1 new rotating coil
- 1 new quadrupole reference magnet

New design

FAIR DIPOLE measurements

New design

- 1 new search (flux) coil
  long flux coil, 3 planes, 9 trajectories

- Measurement Qualification

New analysis

- serial Measurement setup

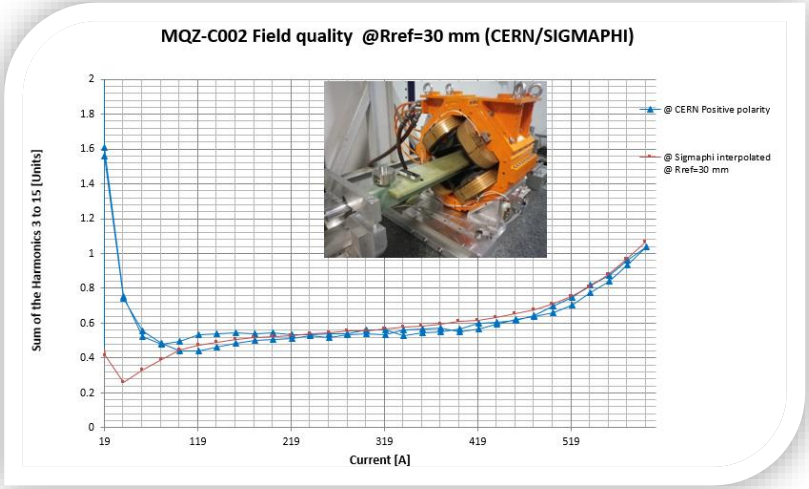

Context

Setup of measurement bench thanks to the help of
2 PhD students – Pacman / CERN
(Industrial secondment – 2 months)

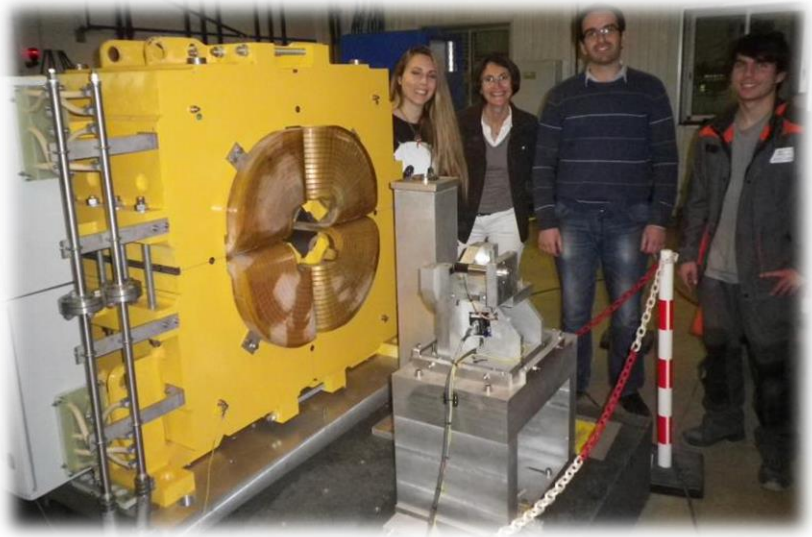

PACMAN

PACMAN
Innovative Doctoral Program

HARMONIC BENCH

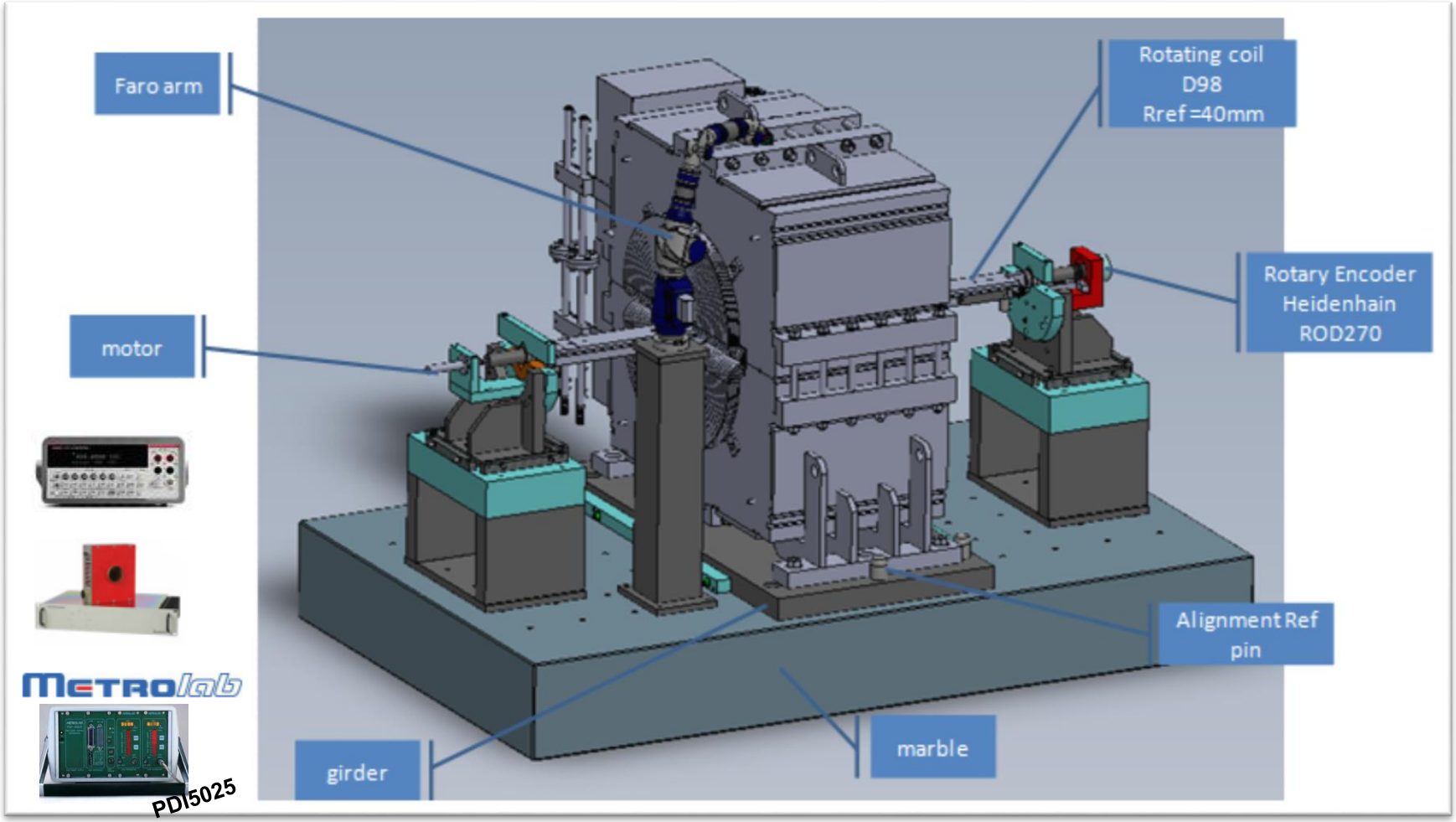

HARMONIC BENCH

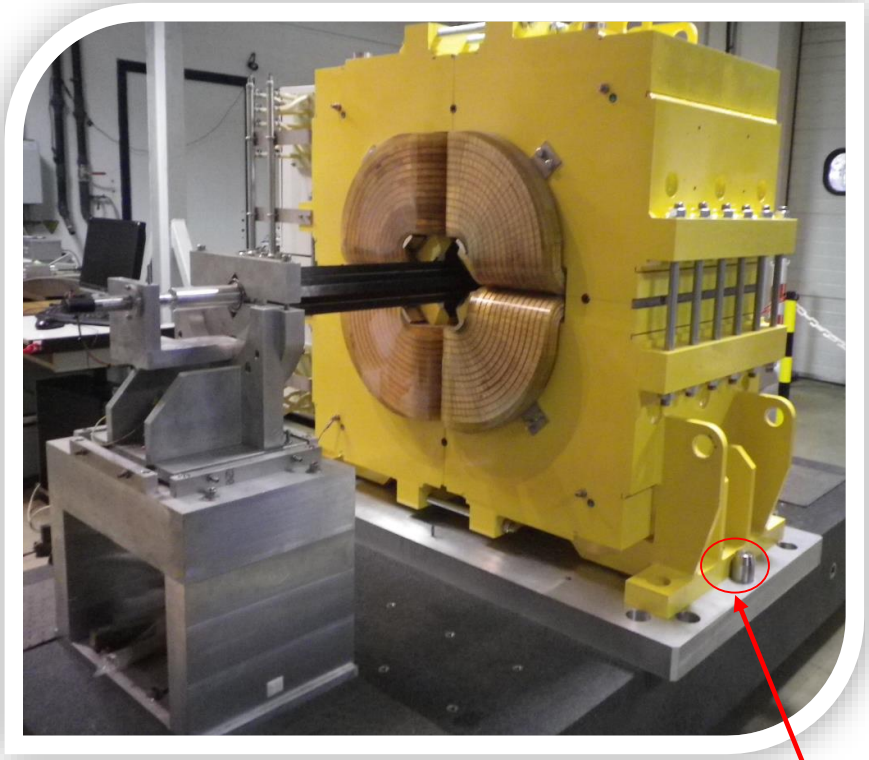

Motor side

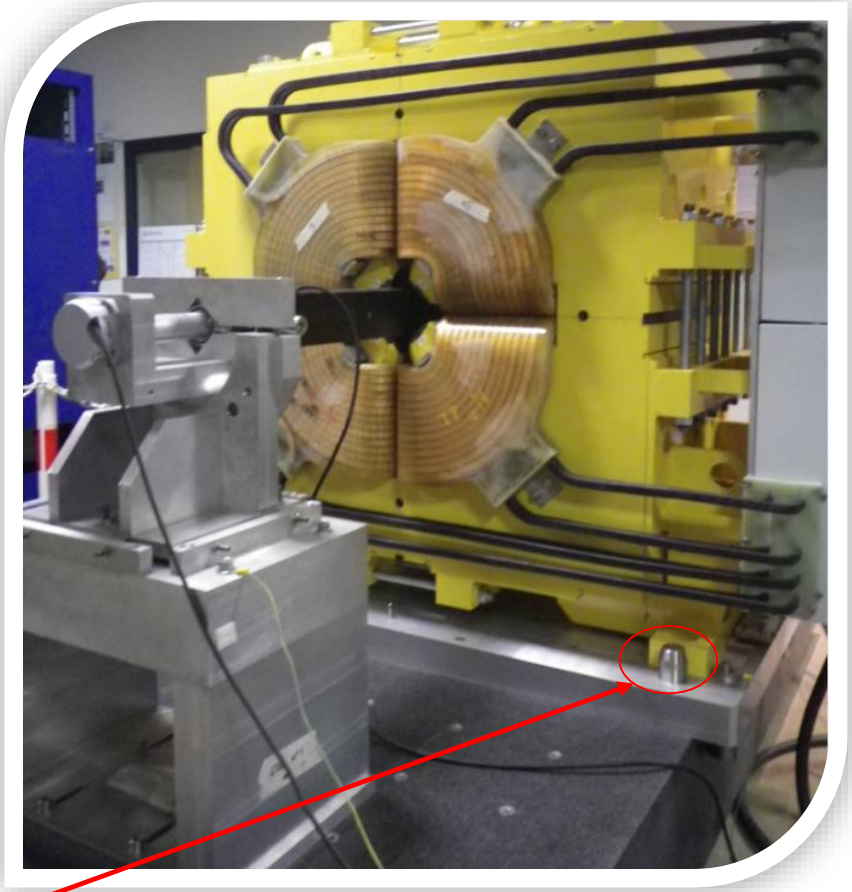

Encoder side

Magnet ref pin

HARMONIC BENCH

Bench alignment process (with the quadrupole permanent magnet)

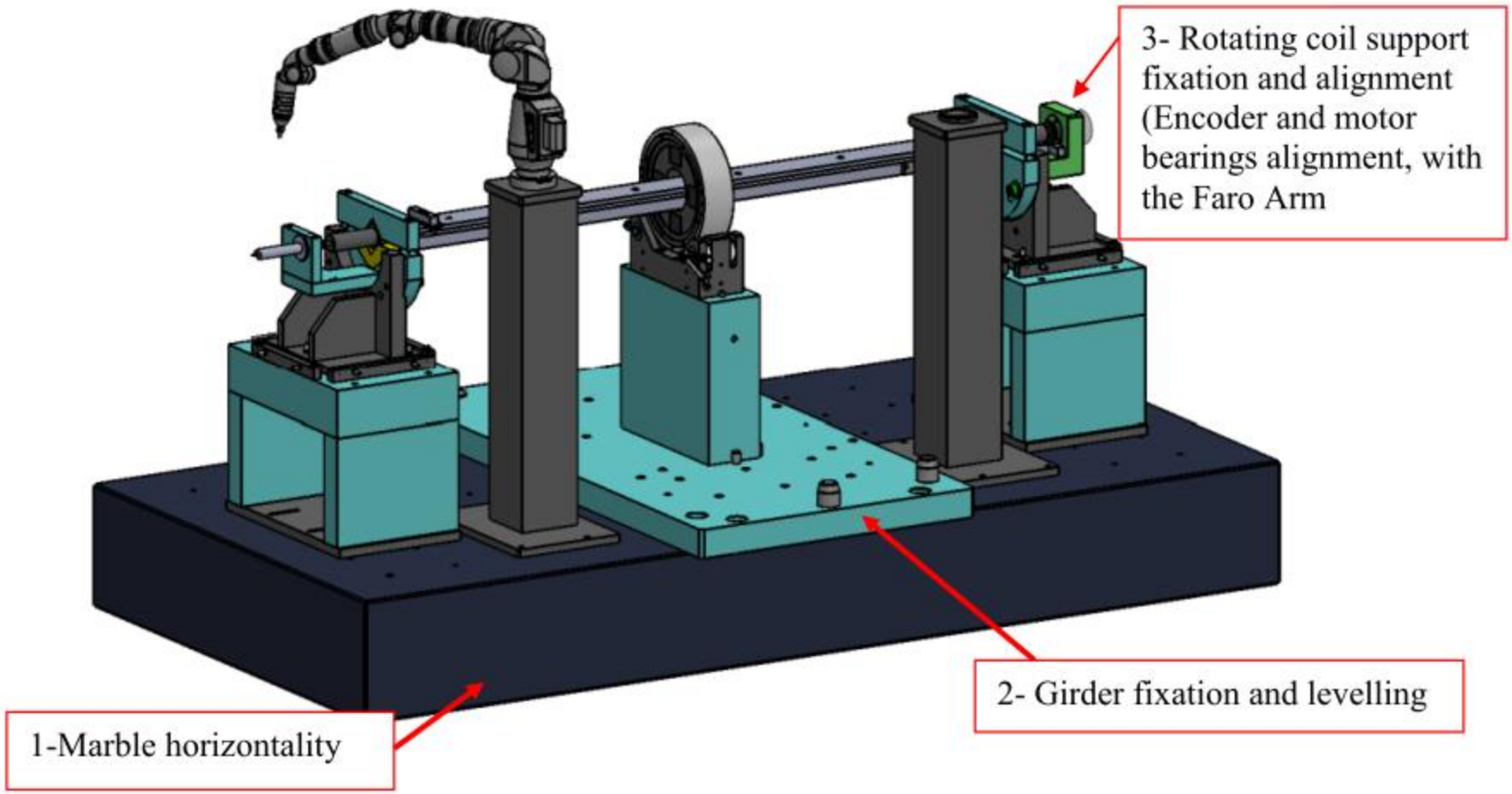

Rotating coil, Design and manufacture

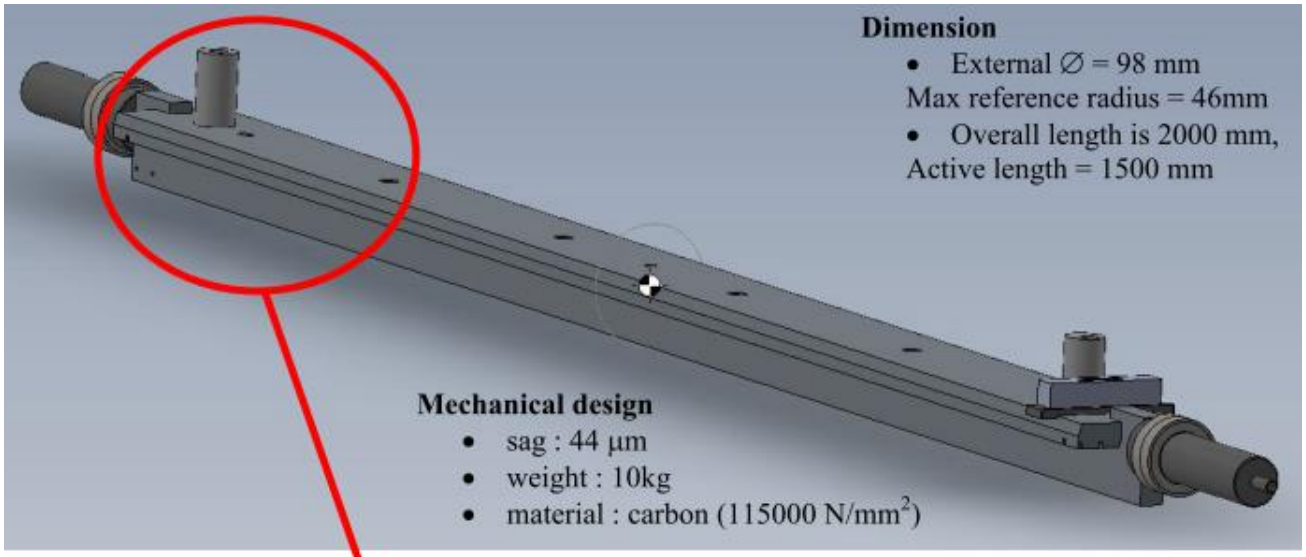

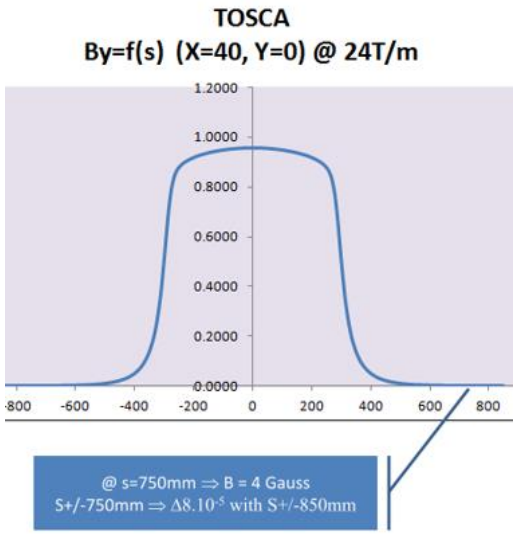

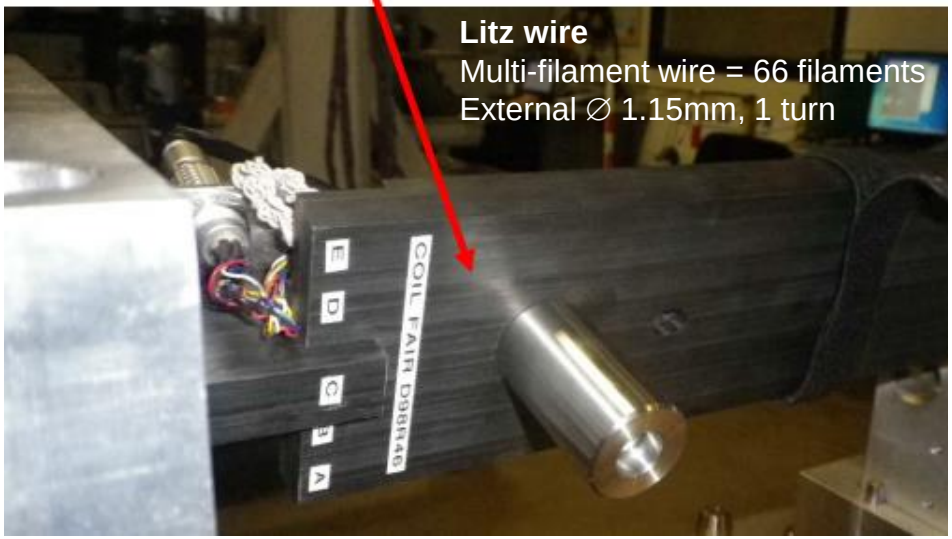

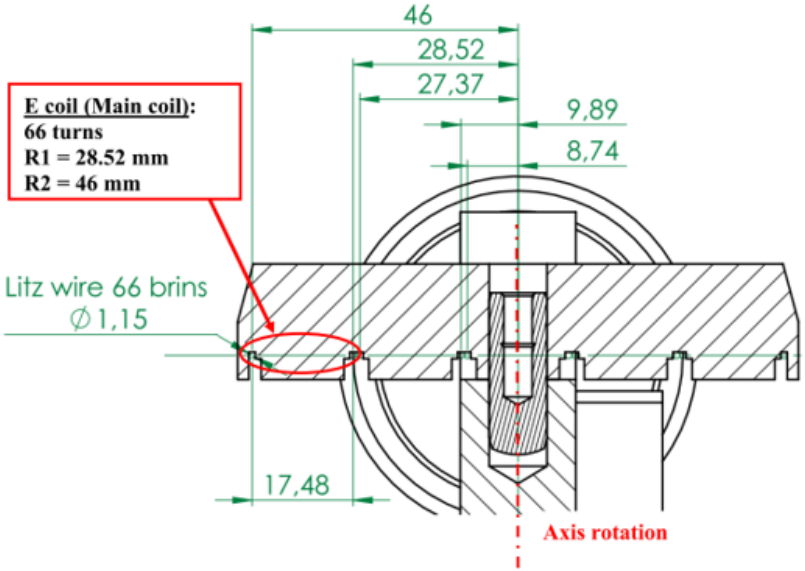

Rotating coil calibration with our quadrupole permanent magnet

New design

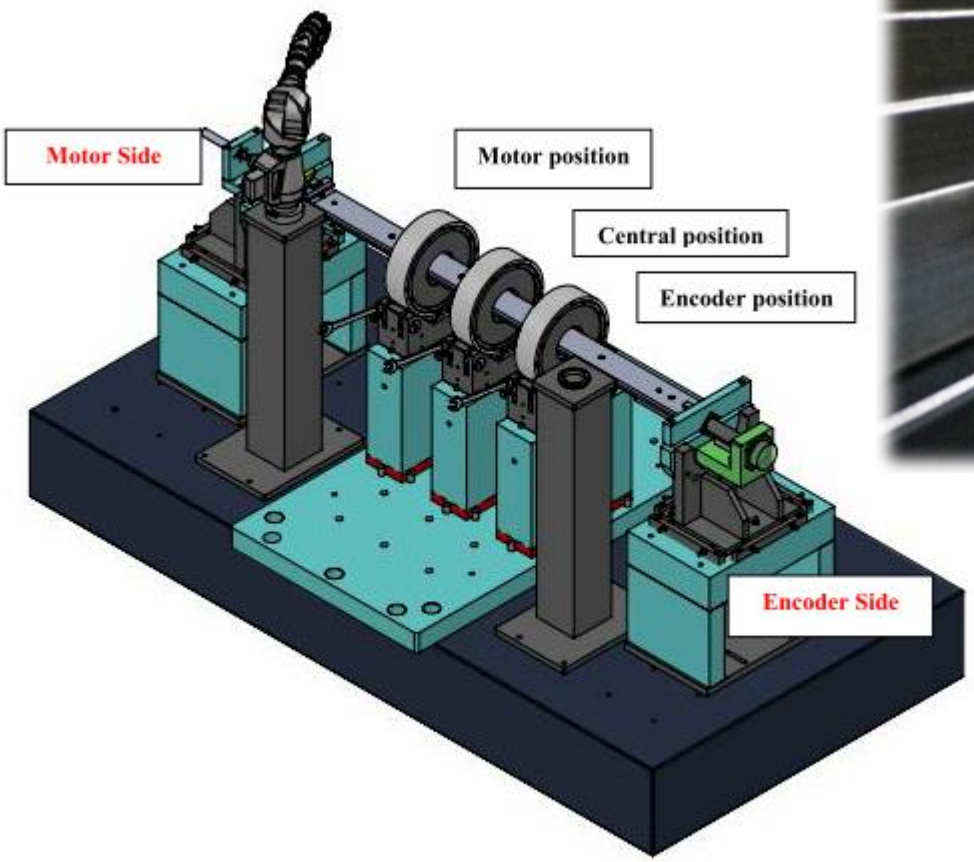

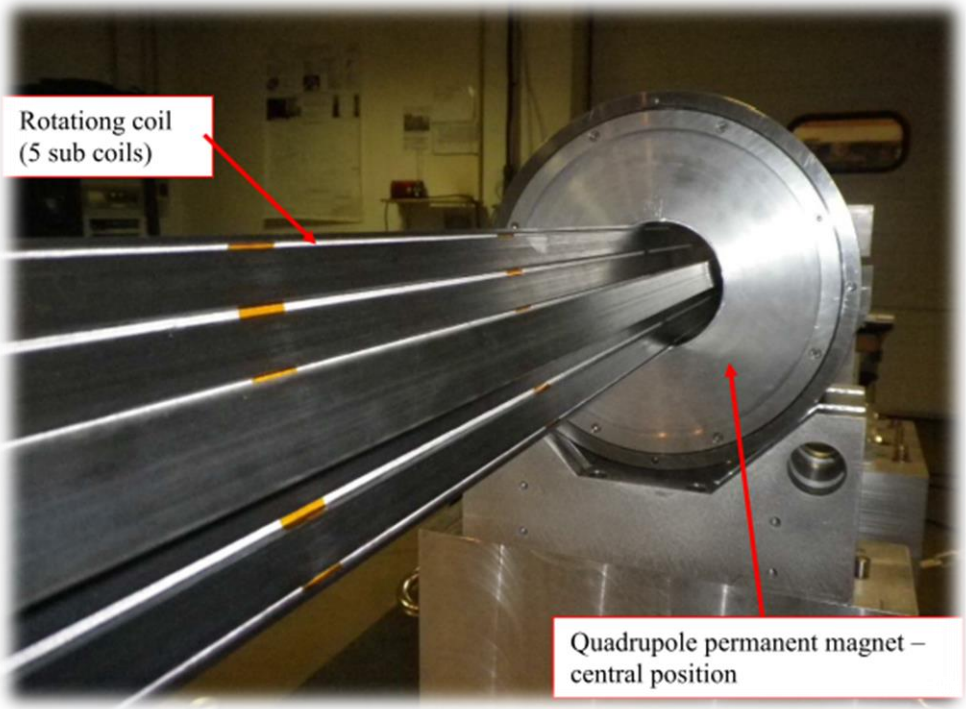

New analysis

Rotating coil calibration results

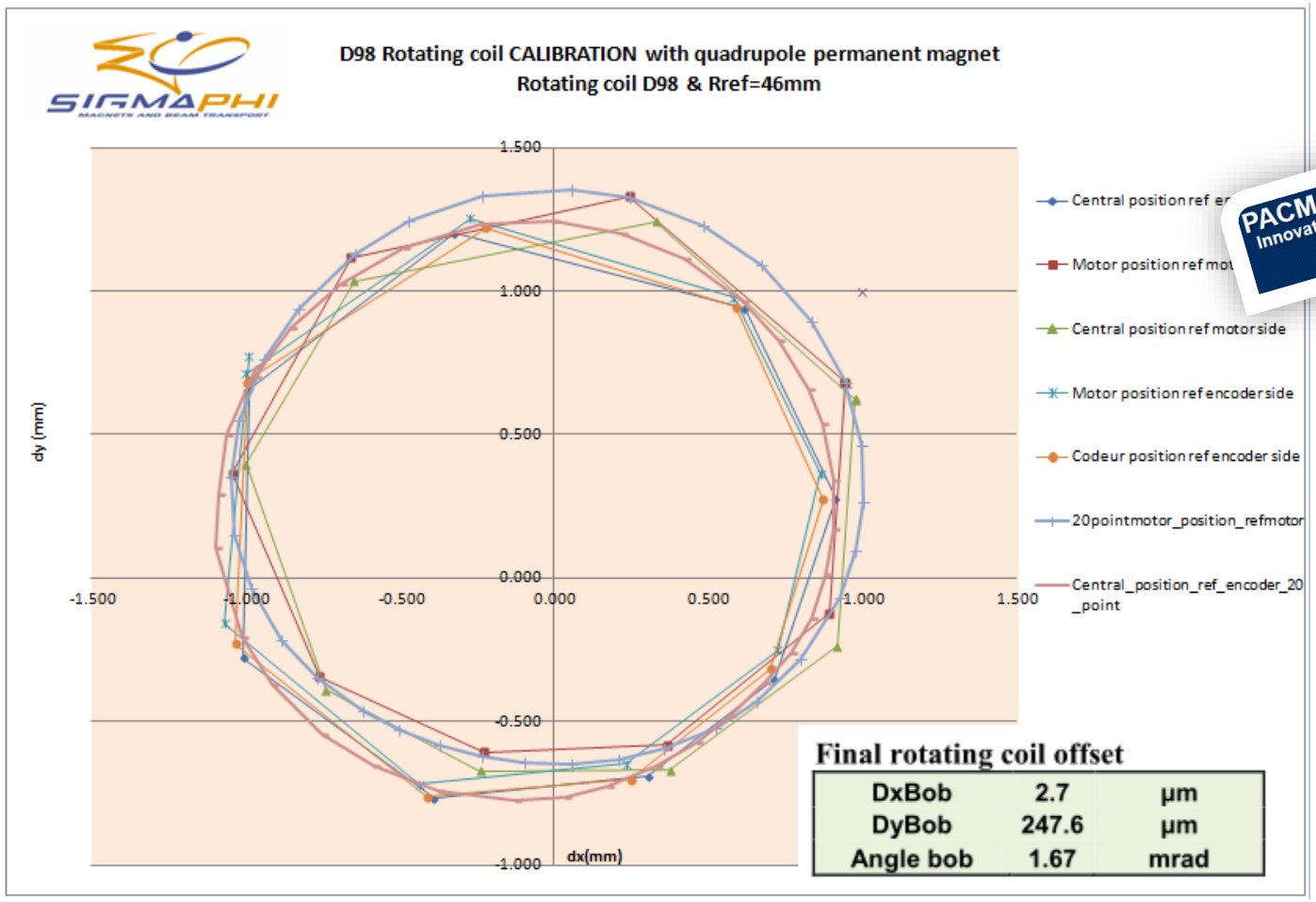

Final rotating coil offset

DxBob	2.7	µm
DyBob	247.6	µm
Angle bob	1.67	mrad

Repeatability results

D98R46 Rotating coil measurement qualification : axis shift

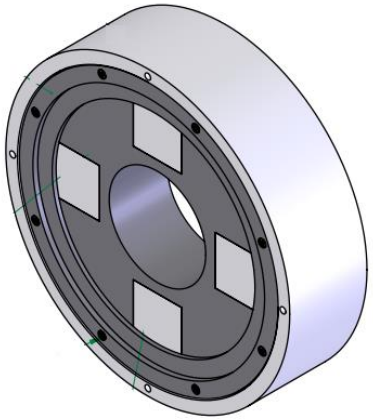

Parameters	Repeatability
Coil sensitivity Dx	22 µm (on 200 µm)
Coil sensitivity Dy	10 µm (on 85 µm)
Horizontality 10 level measurements	0.026 mrad
10 successives measurements	Δdx < 1 µm Δdy < 1 µm ΔdΘ < 0.03 mrad

V shape 60 µm thickness (Kapton) ⇒ 85 µm in dy

Repeatability results

radius: 0.040m	Inom		
(A)	453.49	453.49	453.49
Mesure n°	1	2	3
Dx (mm):	-0.228	-0.228	-0.228
Dy (mm):	-0.089	-0.089	-0.090
Field direction (rad):	0.004147	0.004146	0.004144
Main field module (T.m) =	0.491347	0.491347	0.491342
Gdl (T.m/m) =	12.284	12.284	12.284
Field direction (mrad):	4.147	4.146	4.144
Gl/I ((T.m/m)/A)	0.027087	0.027087	0.027087
Sum Cn 3to15	4.80	4.77	4.83
C3	0.57	0.56	0.57
C4	1.59	1.58	1.61
C6	0.96	0.97	0.98
C10	1.41	1.40	1.40
C14	0.01	0.01	0.01

Error max 0.06 unit ($0.06.10^{-4}$)

Average of 3 measures		Test	
Dx (mm):	-0.228	0.0001	mm
Dy (mm):	-0.089	0.0004	mm
Field direction (rad):	0.00414552	0.00233411	mrad
Main field module (T.m) =	0.49134539		
Gdl (T) =	12.284		

FAIR specification @ Inom, R21mm
- b6 < 1
- b10 < 0.05

c10 (b10) @ R21 = 0.01

Repeatability results

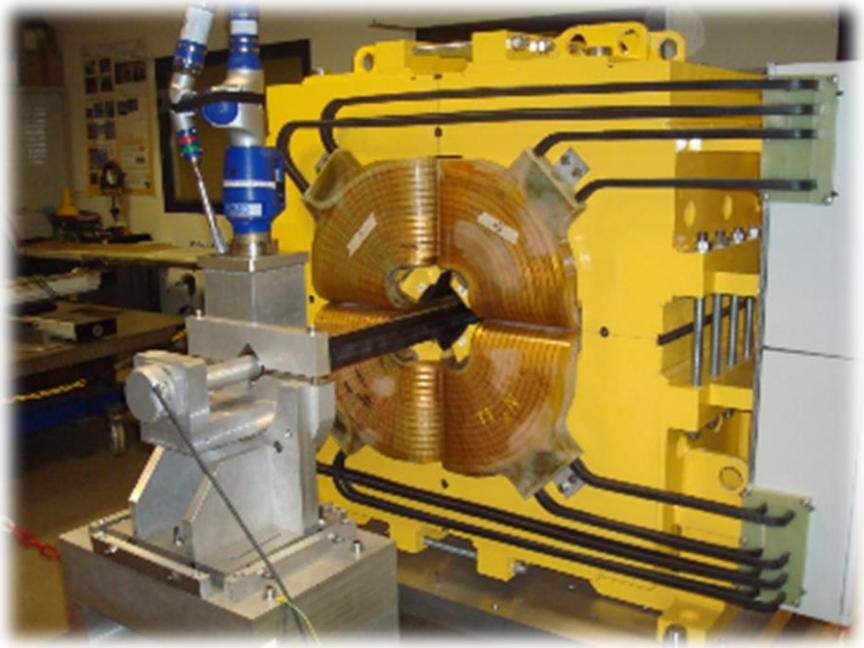

453.4A, Rref40mm	variation
ΔDx (mm)	0.003
ΔDy (mm)	0.006
Δ Angle (mrad)	0.57
Δ Sum Cn 3to14	0.7

Opening Test

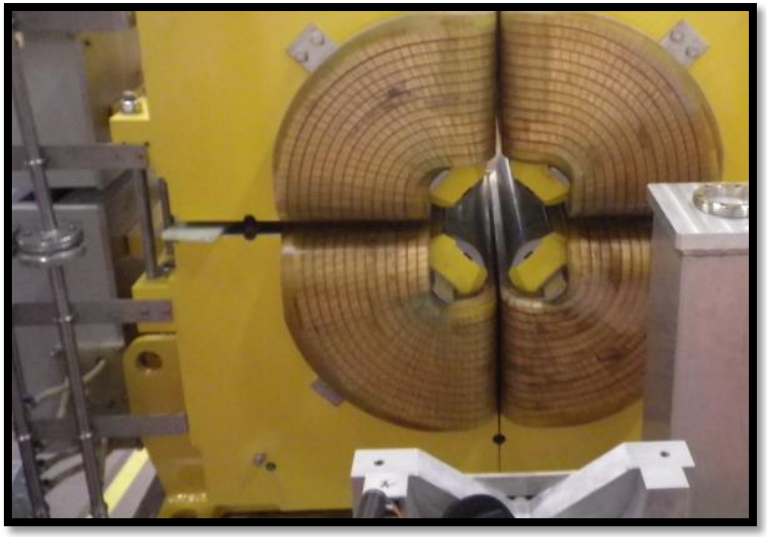

Quad Prototype measurement results

Field reconstruction @ Inom and R=21mm

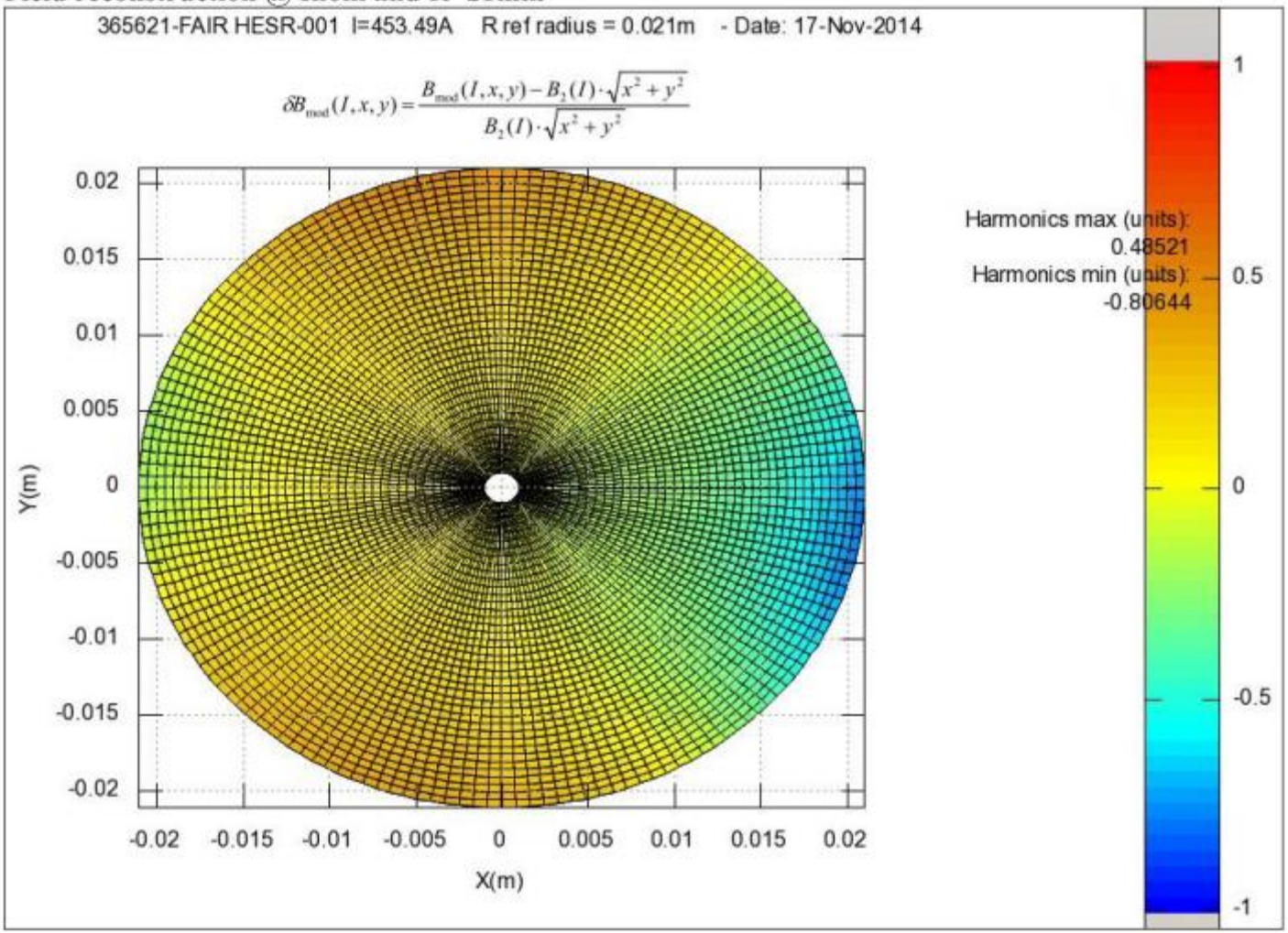

Prototype measurement results

Rref21mm	MEASURE	MEASURE	TOSCA	TOSCA
I(A)	453.5	758.61	453.9	758.61
Main field module (T.m)	0.257957	0.300640	0.259801	0.30578
Gdl (T.m/m)	12.284	14.316	12.371	14.561
Gl/I ((T.m/m)/A)	0.024602	0.018872	0.024778	0.019194
Field quality (unit)	+0.48/-0.81	/	+0.56/-0.28	/
Sum Cn 3to15 (unit)	0.83	0.83	0.56	0.50
C3	0.30	0.37	0.00	0.00
C4	0.44	0.33	0.09	0.10
C6	0.07	0.12	0.26	0.20
C10	0.01	0.01	0.01	0.00
C14	0.00	0.00	0.03	0.03

FAIR specification @ R21mm
|b6| < 1 unit
|b10| < 0.05 unit

Series measurement results

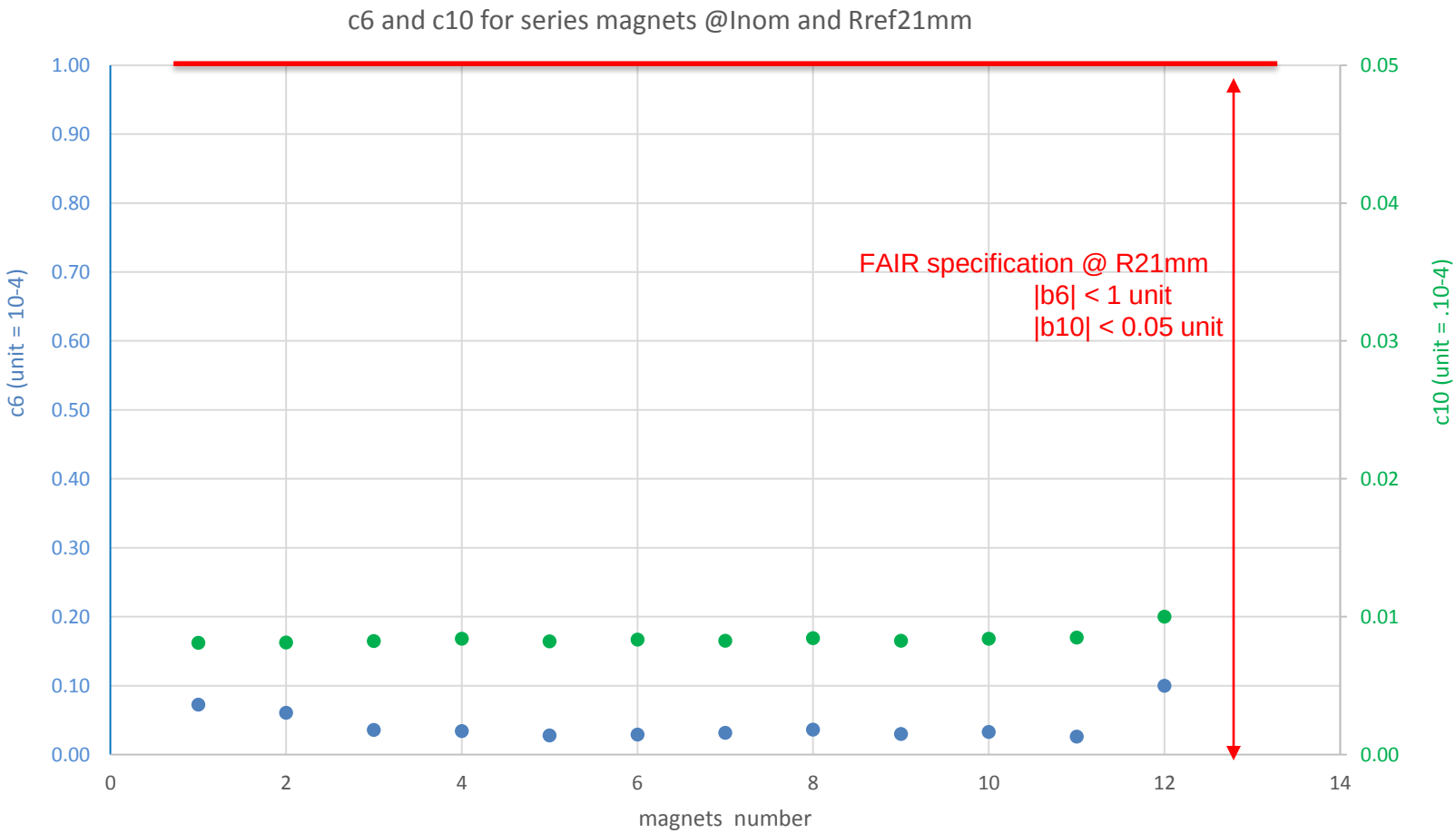

FAIR dipole – search coil bench

HESR FAIR dipole

4.2 m long, 35 t

0.17 T < B < 1.7 T

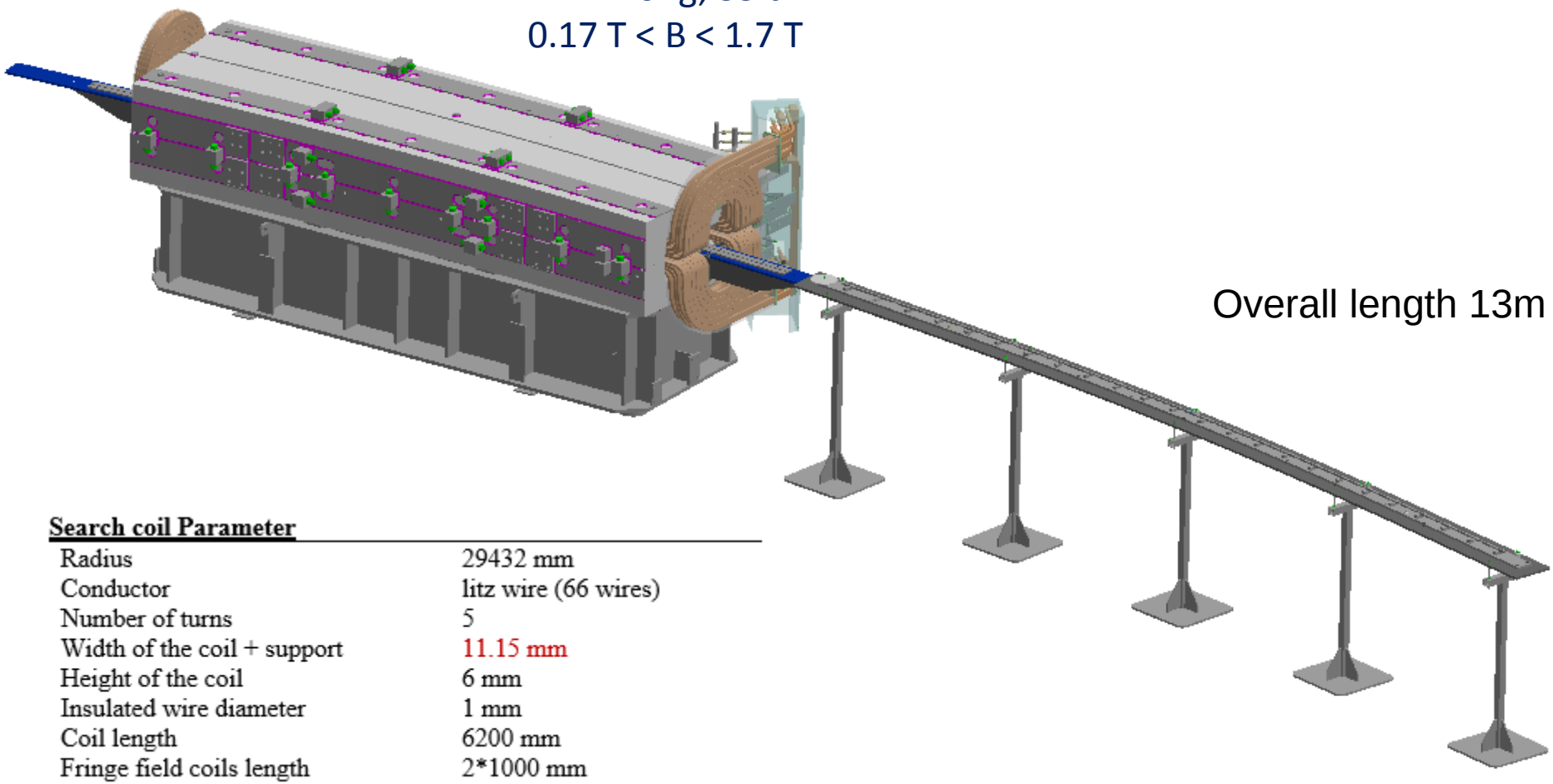

Overall length 13m

Search coil Parameter	
Radius	29432 mm
Conductor	litz wire (66 wires)
Number of turns	5
Width of the coil + support	11.15 mm
Height of the coil	6 mm
Insulated wire diameter	1 mm
Coil length	6200 mm
Fringe field coils length	2*1000 mm
Substrate material	GP03

FAIR dipole – measurement process

HALL
- beam exit side @1743A, plane 0mm & main trajectory with the specific tool for the fringe field
- fiducial position measurement with the Faro arm

SHIM
- adjustment (opposite electric side) to be within Leff proto +/-0.5mm

FLUX
- BL meas @ Ip.s=1743A with current ramp (200A to 1743), Main trajectory, plane 0mm

SHIM
- adjustment (Electric side = Beam entrance) to be within BL proto +/-3.00E-4

FLUX
- BL @ 16 I with current ramp (main trajectory & plane 0mm)
- BL @ 3 I with current ramp (search coil)
  9 trajectories (X+/-35mm, step 8.75mm), 3 planes (Y 0/+20/-20mm), 3 current

HALL
- Local homogeneity (Hall probe fixed on the search coil) @ 3 I ⇒ transverse dB/B

FLUX
- BL from 0A to 200A (R200A-S-1) (main trajectory & plane 0mm) for the entire BL calculation

HALL
- Electric side @1743A, plane 0mm & main trajectory with the specific tool for the fringe field
- fiducial position measurement with the Faro arm

FAIR dipole – search coil bench

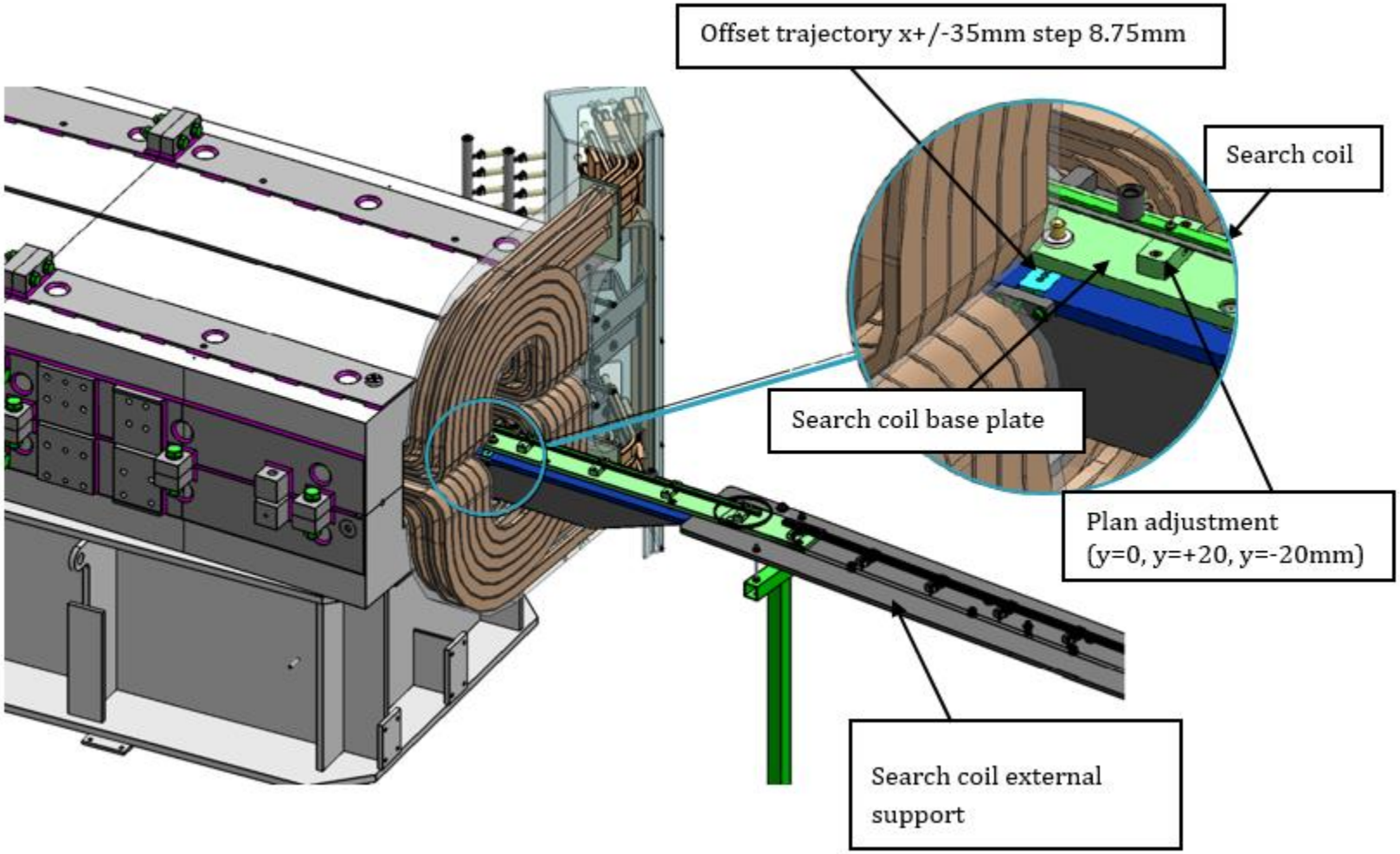

Fringe field measure with Hall probe

specific tool for the fringe field measurement

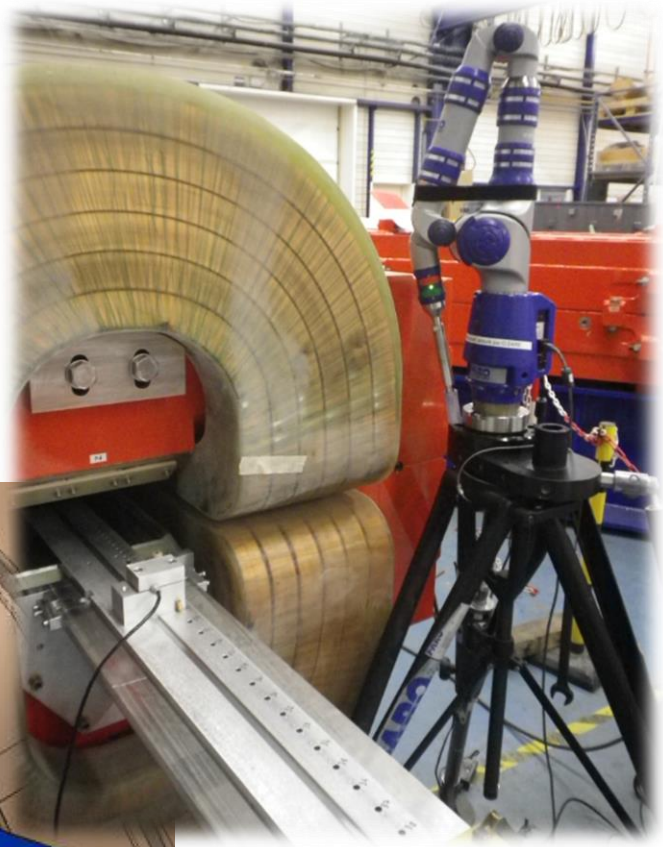

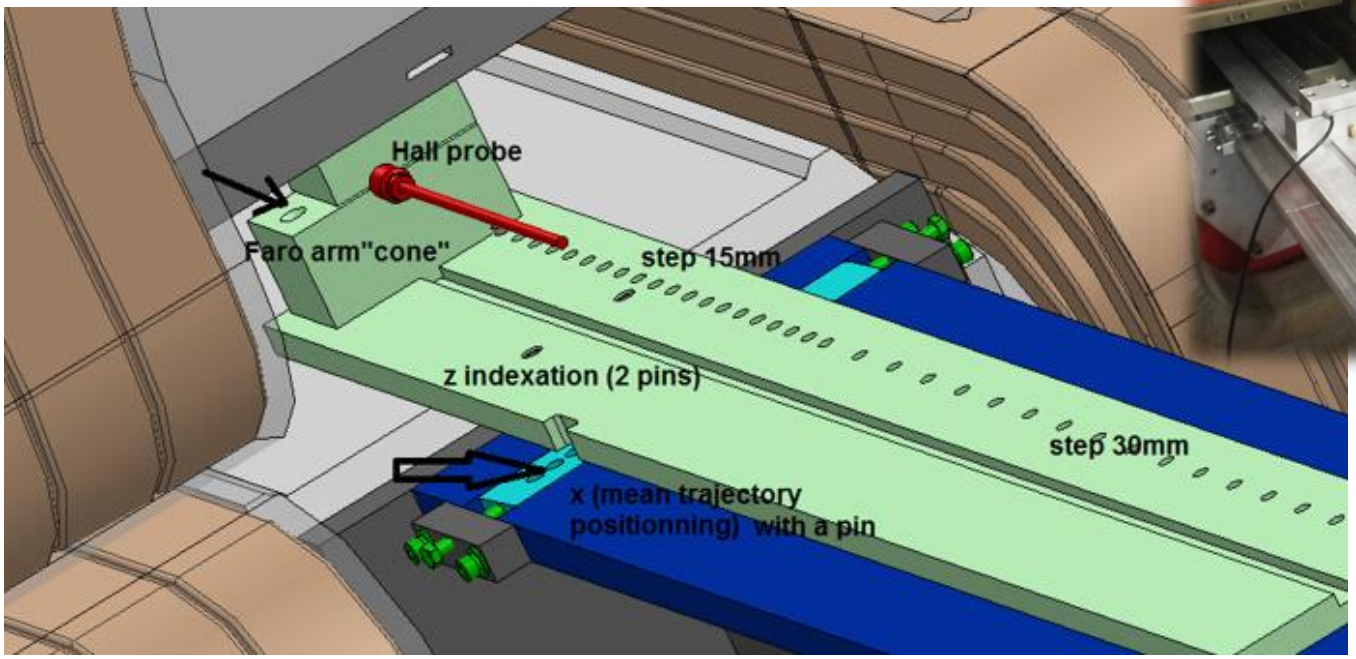

Repeatability
ΔLeff = 0.25mm

Search coil - repeatability

HESR-002: Main trajectory and plane 0mm – repeatability one set of measurement (9+1 traj)

Time	T° H4 (°C)	T°yoke (°C)	Flux (V.s)	BL(T.mm)	B THM(T)	Leff (mm)
13h59	24.6	19.7	14.304	3887.44382	1.043778	3724.397
14h52	25.7	20.1	14.304	3887.36422	1.043945	3723.725
			2.05E-05	**2.05E-05**	-1.60E-04	1.80E-04

Repeatability Δ 2.05.10^{-5}

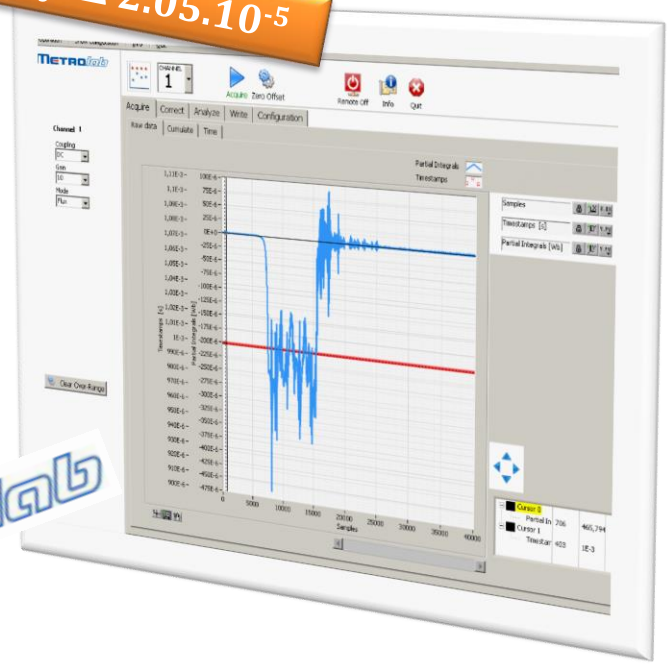

Magnet opening test

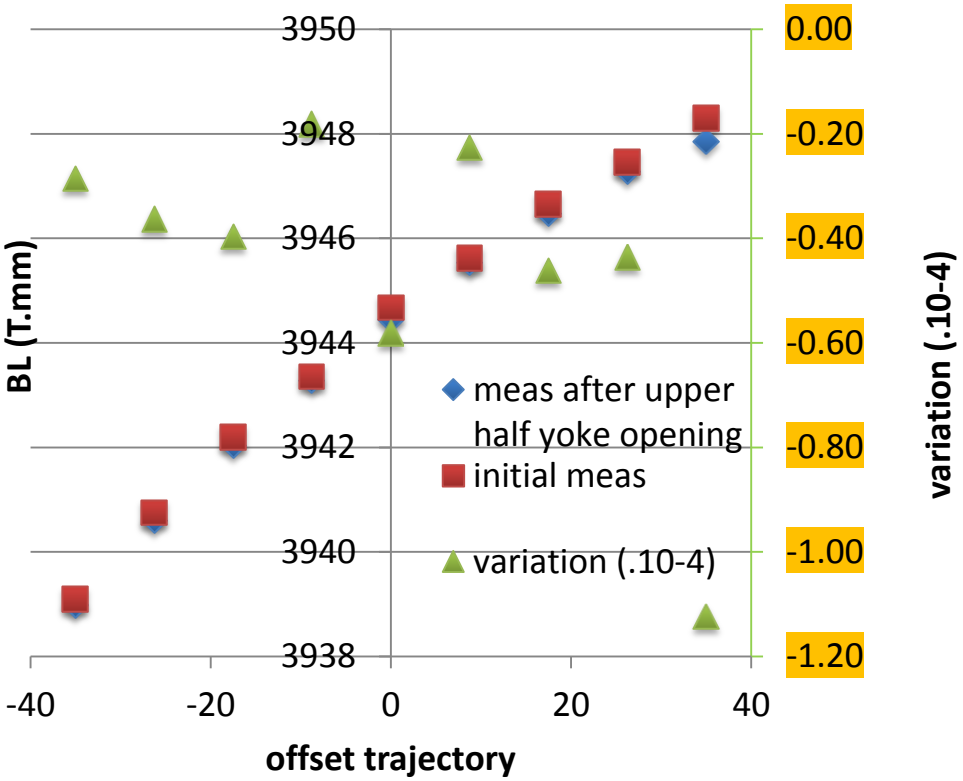

Prototype results

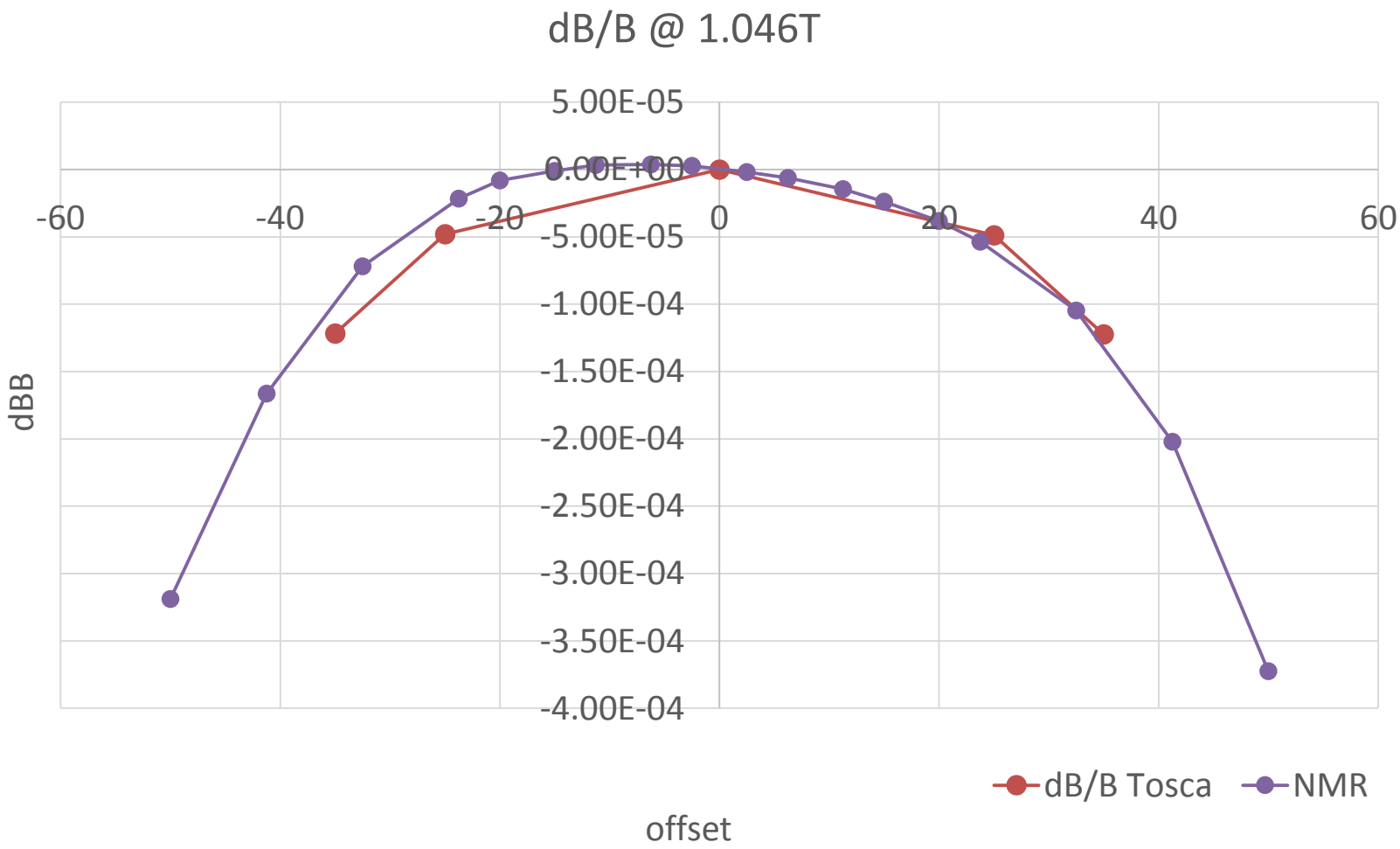

Prototype results

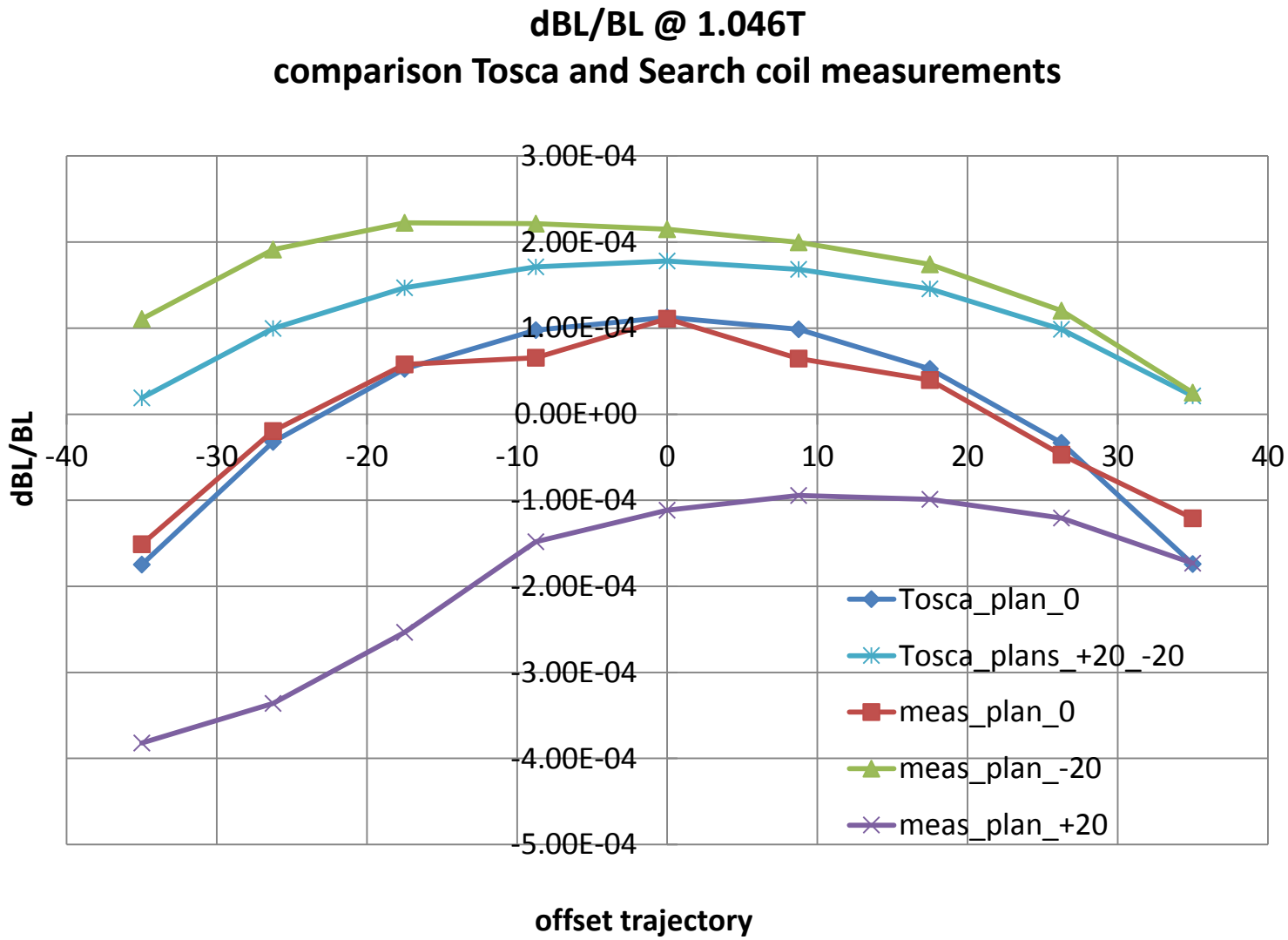

Magnets identity

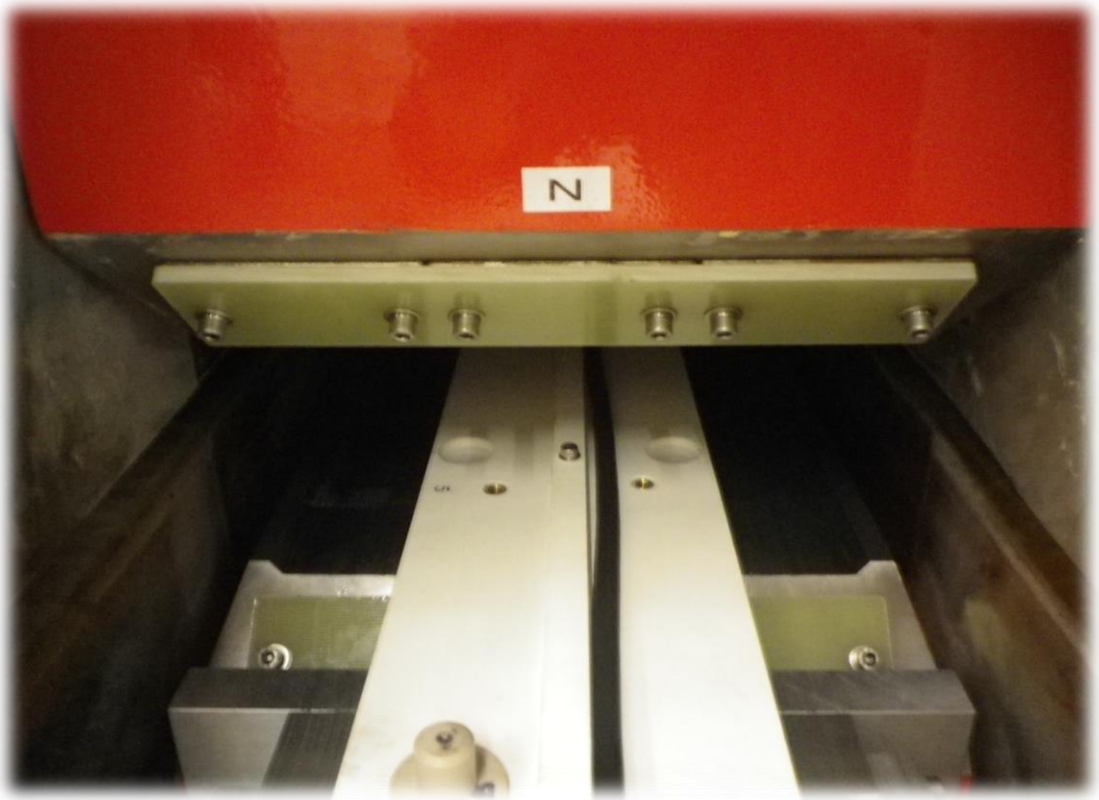

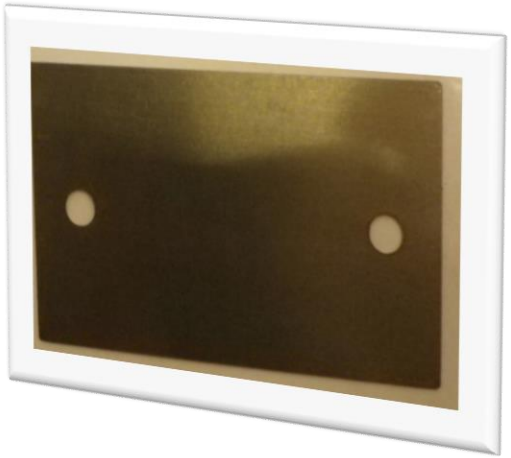

Shim, 0.35mm thickness

On each side

SERIES measurement results

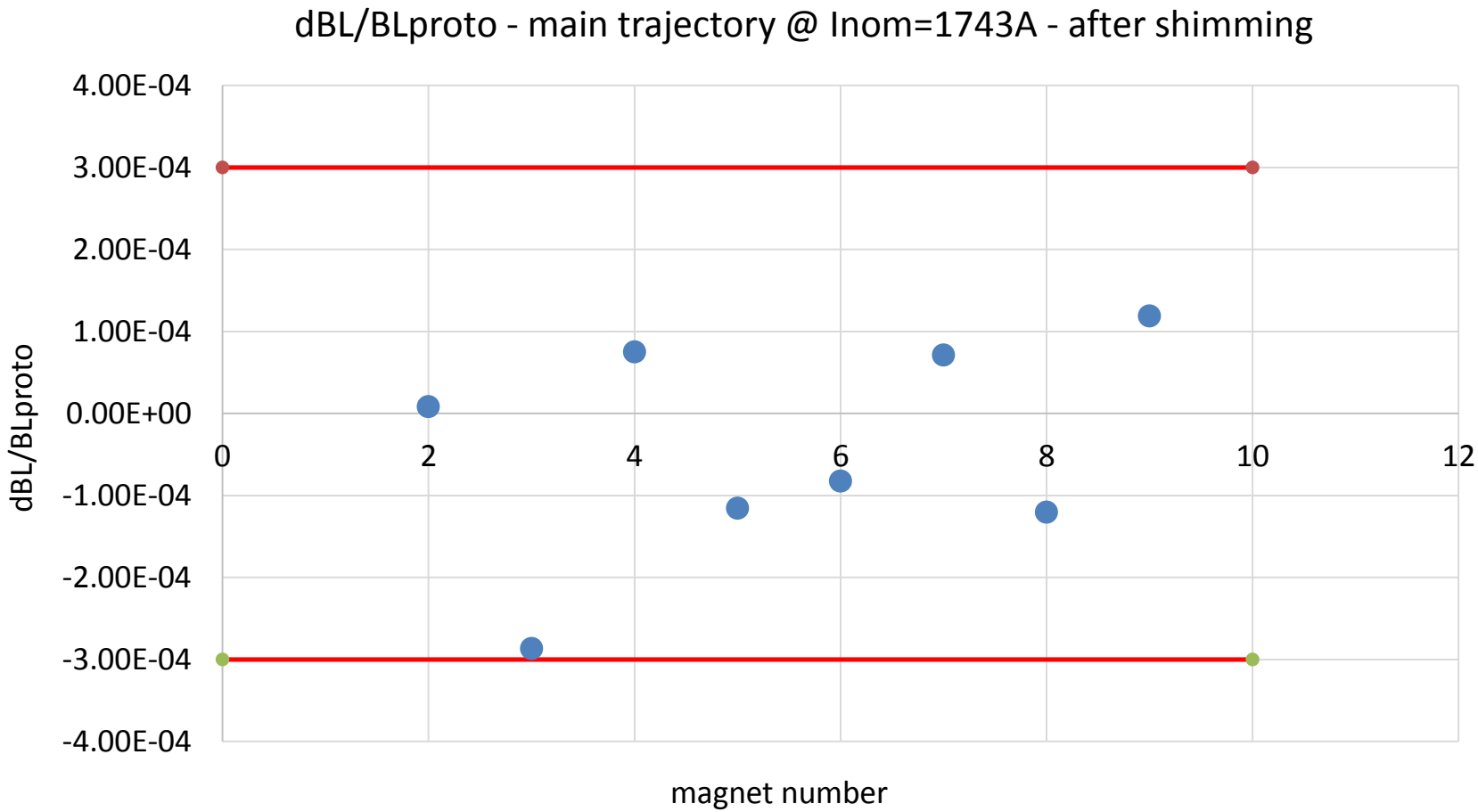

SERIES measurement results

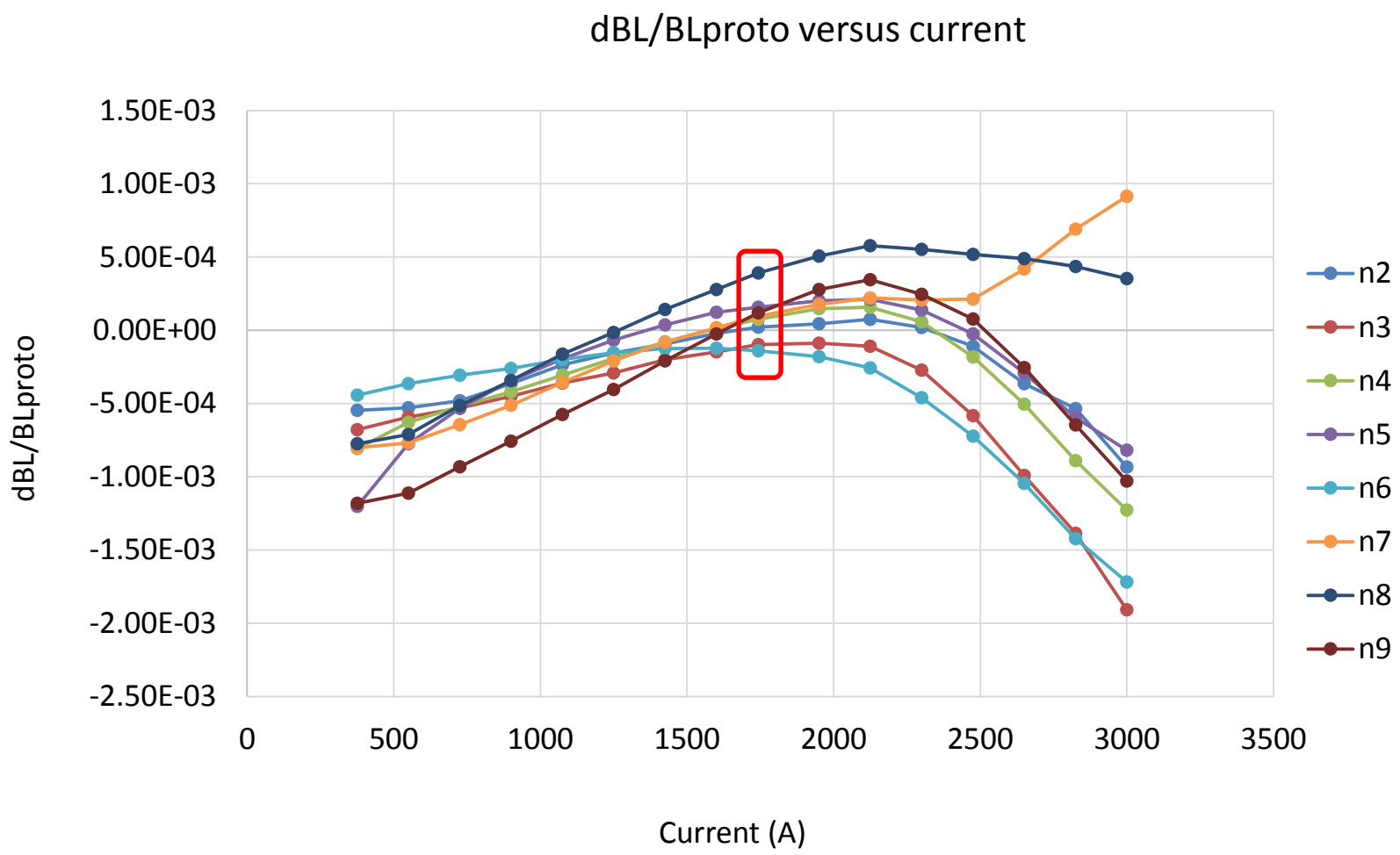

Conclusion

- Both test benches (harmonic + search coil) have been successfully qualified
- The performances of the prototype magnets have been confirmed to be in line with the calculated predictions
- 8 dipole magnets have been measured and shimmed to be identical to the prototype dipole
- 12 quadrupole magnets have been measured and are within the specification

Thank you for your attention